BLAUPUNKT

*Enjoy it.*

# LED Lighting

BLAUPUNKT

BLAUPUNKT Brand established 1924 GERMANY

# Brand History

Blaupunkt is a brand with a rich tradition. The company, which has been on the market since 1924, initially operated under the name of "Ideal", producing headphones. The name under which the brand operates today refers to the blue point which marked the symbol of product quality. The brand was part of the world-famous Bosch concern for over 60 years, and after that period it became permanently associated with the Aurelius concern.

The brand's activity from the beginning of its existence has resulted in many technical inventions shaping its present position. Blaupunkt is responsible, inter alia, for the audio system functioning in modern cars. On these foundations, the brand has built a wide range of electronic devices. Following contemporary trends, Blaupunkt creates appliances from various fields. The brand's offer includes LCD and LED TV sets, alarm systems, household appliances, car accessories, air conditioning, tablets and even electric scooters. The lighting industry is the area where the brand has emerged in the last years of its activity.

Enjoy it.

BLAUPUNKT

BLAUPUNKT Brand established 1924 GERMANY

# Quality and Warranty

Taking care of the satisfaction of our customers and business partners, we use the highest quality materials, electrical equipment and light-emitting diodes from global brands in the production of our lamps. Before our projects go on sale, they undergo rigorous work tests. We make them both in our branches and in cooperation with the German research center TUV. We also make sure that they have confirmed CE and RoHS certificates. Thanks to these activities, we are 100% sure that the offered product is safe and meets photometric and photobiological standards. Our ambition is the highest possible durability, reliability and lifetime of the supplied light sources

**Unconditional** warranty

**Very high** luminous efficiency

**up to 90%** savings

**German** quality

**Exclusive** distributor

**Lifespan**

**Confirmed** parameters

**Environment** friendly

**Adjustable** light colour

*Enjoy it.*

# ESCO

The main purpose of replacing lighting with the ESCO program is to save electricity. To maximize it, you need to choose the right lighting that generates the lowest possible costs. The Greenie brand involved in the ESCO program has created its own distribution department for the highly efficient Blaupunkt brand, whose products are available under the program without costly replacement of lighting.

Making a quick investment without spending large amounts in a short time

A full range of services, from needs analysis to assembly

Up to 70% reduction in electricity consumption

Repayment only from savings achieved

End of the repayment period well before the end of the warranty period

100% savings on the customer's side after the last repayment

Transfer of investment risk to the service provider (Greenie Polska)

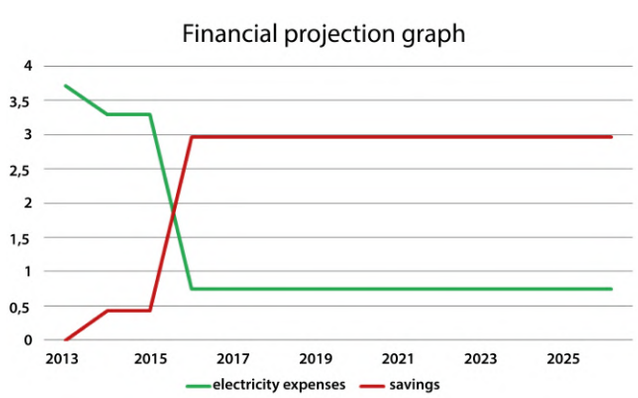


**Enjoy it.**

BLAUPUNKT

BLAUPUNKT Brand established 1924 GERMANY

# Services; Projects; Lighting replacement.

When choosing representatives of the Blaupunkt brand, you can count on an individual and professional approach to each project. Our first step is always to make a careful local vision at the investment site indicated by the client. We are distinguished by detailed documentation, among others the number of luminaires, old light sources, their total power and other activities that will allow the selection of energy-saving LED luminaires in the next stage of work. Our credo is maximum customer satisfaction. We make every effort to make the expectations more realistic, but also to meet the necessary lighting standards for a given place. For this, we carefully plan the building. We take into account, among others layout of all rooms, length of walls, height of ceilings. However, collecting reliable data is not enough. In order to fully satisfy our customers, we create a virtual equivalent in Dialux, which allows you to see the effect before mounting the lamps. Moreover, we estimate the savings on the investment. Thanks to this, you get a guarantee that the cost of the project will pay off quickly. Comprehensive service for Blaupunkt representatives also includes care for the completion of all procedures. After completing the formalities, we send professional fitters to the investment site, who perform the agreed lighting modernization.

Enjoy it.

BLAUPUNKT

BLAUPUNKT Brand established 1924 GERMANY

# Filament LED E27 ST64 8W

## Amber Glass - dimmable

| | |
|---|---|
| EAN: | **5907622673825** |
| SKU: | **BLAUPUNKT-FA-E27-8-WW** |
| Color temperature: | **Warm white 2300K** |
| Luminous flux: | **806m** |
| Type: | **ST64** |
| Power: | **8W** |
| Base: | **E27** |
| Equivalent: | **60W** |
| Beam angle: | **180°** |
| Guarantee: | **3 year** |
| Life span: | **50 000h** |

**Enjoy it.**

BLAUPUNKT

BLAUPUNKT Brand established 1924 GERMANY

# Filament LED E27 A60 8W

## Clear Glass - dimmable

| | |
|---|---|
| EAN: | **5907622673818** |
| SKU: | **BLAUPUNKT-F-E27-8-WW** |
| Color temperature: | **Warm white 2700K** |
| Luminous flux: | **1055lm** |
| Type: | **A60** |
| Power: | **8W** |
| Base: | **E27** |
| Equivalent: | **75W** |
| Beam angle: | **180°** |
| Guarantee: | **3 year** |
| Life span: | **50 000h** |

**Enjoy it.**

# BLAUPUNKT

BLAUPUNKT Brand established 1924 GERMANY

## LED Bulb E27 8,5W

| | | |
|---|---|---|
| EAN: | 5907622671449 | 5907622671432 |
| SKU: | BLAUPUNKT-E27-9W-WW | BLAUPUNKT-E27-9W-NW |
| Color temperature: | Warm white 2700K | Neutral white 4000K |
| Luminous flux: | 900lm | 900lm |
| Type: | A60 | A60 |
| Power: | 8,5W | 8,5W |
| Base: | E27 | E27 |
| Equivalent: | 60W | 60W |
| Beam angle: | 230° | 230° |
| Guarantee: | 3 year | 3 year |
| Life span: | 50 000h | 50 000h |

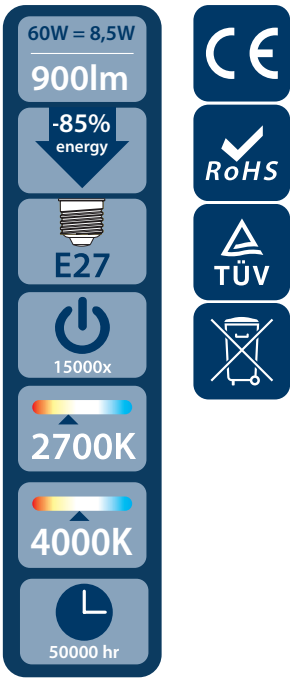


**Enjoy it.**

# BLAUPUNKT

BLAUPUNKT Brand established 1924 GERMANY

# LED Bulb E27 A60 6W

| | | |
|---|---|---|
| EAN: | 5907622673399 | 5907622673382 |
| SKU: | BLAUPUNKT-E27-6W-WW | BLAUPUNKT-E27-6W-NW |
| Color temperature: | Warm white 2700K | Neutral white 4000K |
| Luminous flux: | 570lm | 600lm |
| Type: | A60 | A60 |
| Power: | 6W | 6W |
| Base: | E27 | E27 |
| Equivalent: | 48W | 48W |
| Beam angle: | 230° | 230° |
| Guarantee: | 3 year | 3 year |
| Life span: | 50 000h | 50 000h |

*Enjoy it.*

BLAUPUNKT

BLAUPUNKT Brand established 1924 GERMANY

# LED Bulb E27 A60 12W

| | | |
|---|---|---|
| EAN: | 5907622673412 | 5907622673405 |
| SKU: | BLAUPUNKT-E27-12W-WW | BLAUPUNKT-E27-12W-NW |
| Color temperature: | Warm white 2700K | Neutral white 4000K |
| Luminous flux: | 1200lm | 1260lm |
| Type: | A60 | A60 |
| Power: | 12W | 12W |
| Base: | E27 | E27 |
| Equivalent: | 86W | 86W |
| Beam angle: | 230° | 230° |
| Guarantee: | 3 year | 3 year |
| Life span: | 50 000h | 50 000h |

*Enjoy it.*

# BLAUPUNKT

BLAUPUNKT Brand established 1924 GERMANY

# SMART WIFI MULTICOLOR LED

## E27 LIGHT BULB 9W

tuya CONNECTED

WiFi

3 YEAR GUARANTEE

WORKS WITH amazon alexa

works with Ok Google

***Set the right mood with single touch.***

| | |
|---|---|
| EAN: | **5907622675836** |
| SKU: | **BLAUPUNKT-E27-9W-SMART** |
| Color Temperature: | **2700K - 6500K Full White Spectrum + RGB** |
| Luminous Flux: | **900 Lumens** |
| Type: | **A60 + Dimmable by App** |
| Connectivity: | **Wi-Fi 2.4 GHz + Bluetooth** |
| Power: | **9W** |
| Base: | **E27** |
| Equivalent: | **60W** |
| Beam Angle: | **220°** |
| Warranty: | **3 Years** |
| Life Span: | **50 000h** |

**White & Colour** - Set the right ambiance for relaxing time with family or party with friends. Schedule to turn on or off automatically at pre-set time.

**App Remote Control** - Control with ease anywhere any time, through the "Tuya" app on your smart phone or tablet.

**Simple Voice Control** - Works with Alexa and Google Home, allows you to control lights hands-free with a simple voice command.

**Simple to Setup** - No HUB required, just power it on and follow a quick guide to connect it to a 2.4GHz Wifi network.

***Enjoy it.***

BLAUPUNKT

BLAUPUNKT Brand established 1924 GERMANY

# LED Candle E14 6,8W

| | | |
|---|---|---|
| EAN: | 5907622671463 | 5907622671470 |
| SKU: | BLAUPUNKT-E14-7W-WW | BLAUPUNKT-E14-7W-NW |
| Color temperature: | Warm white 2700K | Neutral white 4000K |
| Luminous flux: | 640lm | 680lm |
| Type: | Candle | Candle |
| Power: | 6,8W | 6,8W |
| Base: | E14 | E14 |
| Equivalent: | 50W | 50W |
| Beam angle: | 230° | 230° |
| Guarantee: | 3 year | 3 year |
| Life span: | 50 000h | 50 000h |

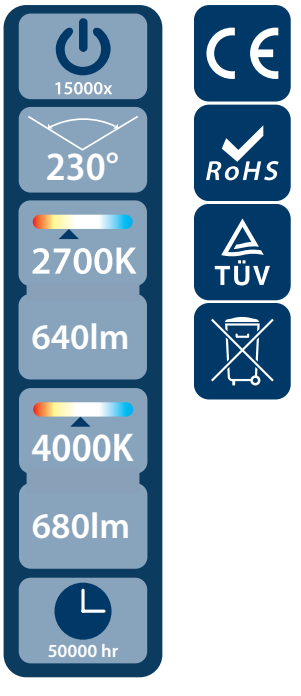


*Enjoy it.*

# BLAUPUNKT

BLAUPUNKT Brand established 1924 GERMANY

# LED Spot GU10 5W

3 YEAR GUARANTEE

| | | |
|---|---|---|
| EAN: | 5907622671487 | 5907622671494 |
| SKU: | BLAUPUNKT-GU10-5W-WW | BLAUPUNKT-GU10-5W-NW |
| Color temperature: | Warm white 2700K | Neutral white 4000K |
| Luminous flux: | 450lm | 475lm |
| Type: | Spot | Spot |
| Power: | 5W | 5W |
| Base: | GU10 | GU10 |
| Equivalent: | 50W | 50W |
| Beam angle: | 100° | 100° |
| Guarantee: | 3 year | 3 year |
| Life span: | 50 000h | 50 000h |

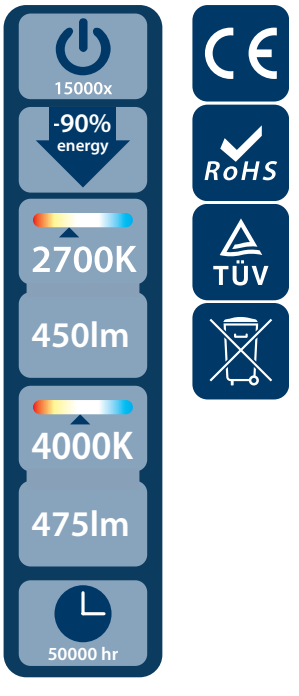


*Enjoy it.*

BLAUPUNKT

BLAUPUNKT Brand established 1924 GERMANY

# Strip Led Galaxy 5M Set

**CRI** — **Colour rendering index** CRI>90

**P&P** — **Plug&Play** full set

**Waterproof** IP20

**LED 60/m** — **LEDs quantity** 60 pcs

**5m** — **Length** 5m

**Switch** — **Switch** ON/OFF

| | | | |
|---|---|---|---|
| EAN: | **5907622672613** | **5907622672620** | **5907622672637** |
| SKU: | **BLAUPUNKT-TL12WWSET** | **BLAUPUNKT-TL12NWSET** | **BLAUPUNKT-TL12CWSET** |
| Colour temperature: | **Warm white 3000K** | **Neutral white 4000K** | **Cold white 6000K** |
| Luminous flux: | **720lm/m** | **750lm/m** | **780lm/m** |
| Type: | **Plug&Play** | **Plug&Play** | **Plug&Play** |
| Led type: | **2835 SMD** | **2835 SMD** | **2835 SMD** |
| CRI/Ra: | **>80** | **>80** | **>80** |
| Voltage: | **12V DC** | **12V DC** | **12V DC** |
| LEDs quantity: | **60/m** | **60/m** | **60/m** |
| Guarantee: | **2 year** | **2 year** | **2 year** |
| Life span: | **50 000h** | **50 000h** | **50 000h** |

BLAUPUNKT

BLAUPUNKT Brand established 1924 GERMANY

# Strip Led RGB 3M Set

**RGB** — **Strip multicolor**

**P&P** — **Plug&Play** full set

**Waterproof** IP20

**LED 30/m** — **LEDs quantity** 30/m

**3m** — **Length** 3m

**RC** — **Remote** control

| | |
|---|---|
| EAN: | **5907622672583** |
| SKU: | **BLAUPUNKT-TL12RGB-SET** |
| Colour temperature: | **Multicolor RGB** |
| Length: | **3m** |
| Type: | **Plug&Play** |
| Led type: | **5050 SMD** |
| Remote control type: | **IR- infrared** |
| Voltage: | **12V DC** |
| LEDs quantity: | **30pcs/1m** |
| Guarantee: | **2 year** |
| Life span: | **50 000h** |

CE RoHS

BLAUPUNKT

BLAUPUNKT Brand established 1924 GERMANY

# Strip Led Pro Line RGB+WW

**RGB+WW** — **Strip multicolor + warm white**

**LUMENS** — **Power** 16W/m

**3M** — **Self-adhesive** with 3M tape

**LED 60/m** — **LEDs quantity** 60/m

**25m** — **Length** 25m

**Possibility cut** every 5cm

| | |
|---|---|
| EAN: | **5907622672682** |
| SKU: | **BLAUPUNKT-TL12RGBWW** |
| Colour temperature: | **Multicolor + warm white** |
| Length: | **25m** |
| Power: | **16W/m** |
| Led type: | **5050 SMD** |
| Width: | **12mm** |
| Voltage: | **12V DC** |
| LEDs quantity: | **60pcs/m** |
| Guarantee: | **2 year** |
| Life span: | **50 000h** |

CE RoHS

BLAUPUNKT

BLAUPUNKT Brand established 1924 GERMANY

# TV Glow Set 4000K USB

## With switch

**Eliminates** eye strain

**USB** plug&play

**Water Resistant** IP20

**No reflection** on the screen

**Length** 2 x 45cm

**Switch** ON/OFF

| | |
|---|---|
| EAN: | **5907622672644** |
| SKU: | **BLAUPUNKT-TVSETNW** |
| Colour temperature: | **Neutral white 4000K** |
| Length: | **2x45cm** |
| Type: | **USB Plug&Play** |
| LED Type: | **2835 SMD** |
| CRI/Ra: | **>80** |
| Voltage: | **5V DC** |
| LEDs quantity: | **18pcs/45cm** |
| Guarantee: | **2 year** |
| Life span: | **50 000h** |

CE RoHS

BLAUPUNKT

BLAUPUNKT Brand established 1924 GERMANY

# Cabinet Light Set 4000K

## With Motion Sensor

**Motion sensor**
PiR

**Batteries included**
4xAAA

**Water Resistance**
IP20

**LEDs quantity**
30 pcs

**Length**
1m

**Colour Temperature**
Neutral White

| | |
|---|---|
| EAN: | **5907622672590** |
| SKU: | **BLAUPUNKT-CABSETNW** |
| Colour Temperature: | **Neutral white 4000K** |
| Length: | **1m** |
| Type: | **Plug&Play** |
| Led type: | **2835 SMD** |
| CRI/Ra: | **>80** |
| Voltage: | **4xAAA** |
| LEDs quantity: | **30pcs/1m** |
| Guarantee: | **2 year** |
| Life span: | **50 000h** |

CE RoHS

BLAUPUNKT

BLAUPUNKT Brand established 1924 GERMANY

# Led Strip Pro Line 25M

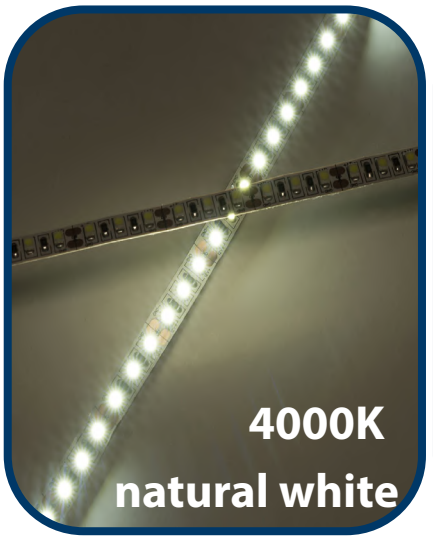

**CRI** **Colour rendering index** CRI>90

50000 hr **Life span** leds

**Water resistance** IP20

LUMENS **Power** 11W/m

15000x **Cycles** on/off

**90% more** savings

| | | | |
|---|---|---|---|
| EAN: | 5907622672651 | 5907622672668 | 5907622672675 |
| SKU: | BLAUPUNKT-TL12WW-P | BLAUPUNKT-TL12NW-P | BLAUPUNKT-TL12CW-P |
| Color temperature: | Warm white 3000K | Natural white 4000K | Cold white 6500K |
| Luminous flux: | 980lm/m | 980lm/m | 980lm/m |
| Power: | 11W/m | 11W/m | 11W/m |
| Led type: | 2835 SMD | 2835 SMD | 2835 SMD |
| CRI/Ra: | >80 | >80 | >80 |
| Voltage: | 12V DC | 12V DC | 12V DC |
| Led Pcs: | 120/m | 120/m | 120/m |
| Guarantee: | 2 year | 2 year | 2 year |
| Life span: | 50 000h | 50 000h | 50 000h |

BLAUPUNKT

BLAUPUNKT Brand established 1924 GERMANY

# Flash Led Patrol 1000lm IPX4

**Lumens**
**1000lm**

**Full Charging**
**USB - 3h**

**Battery**
**2000 mAh**
**= 8h working**

**Zoom**
**240m / 80m**

***Enjoy it.***

| | |
|---|---|
| EAN: | **5907622671586** |
| SKU: | **BLAUPUNKT-LR-1000-NW** |
| Color temperature: | **Natural white 4000K** |
| Luminous flux: | **1000lm** |
| Type: | **Rechargable** |
| Battery: | **1x18650 li-ion, 2000 mAh** |
| Working time: | **up to 8h** |
| Efficiency: | **100lm/W** |
| Beam distance: | **240m** |
| Weight: | **229g** |
| Life span: | **50 000h** |

18650 Li-ion | IPX4 | 240m

USB | Ø43mm x 150mm | LUMENS 1000 lm

working time up to 8h | 229g | 3h

BLAUPUNKT

BLAUPUNKT Brand established 1924 GERMANY

# Flash Led Blitz 3xAAA IPX4

**4 mode**
high / low
strobo / off

**Water resistant**
IPX4

**Full metal body**
Tail On/Off
switch

**Zoom**
Focus function

***Enjoy it.***

| | |
|---|---|
| EAN: | **5907622671623** |
| SKU: | **BLAUPUNKT-LAAA-800** |
| Color temperature: | **Cold white 6000K** |
| Luminous flux: | **350lm** |
| Type: | **Hand torch** |
| Battery: | **3xAAA** |
| Working time: | **up to 6h** |
| Power: | **6W** |
| Life span: | **50 000h** |

3xAAA*

IPX4

Ø41mm x 138mm

LUMENS 350 lm

working time up to 6h

160g

* Duracell batteries are included with the flashlight.

BLAUPUNKT

BLAUPUNKT Brand established 1924 GERMANY

# Flash Led Pen 2xAAA IPX4

**3 mode**
high / low / off

**Water resistant**
IPX4

**Full metal body**
Tail On/Off switch

**Zoom**
Focus function

***Enjoy it.***

| | |
|---|---|
| EAN: | **5907622671630** |
| SKU: | **BLAUPUNKT-LAAA-200** |
| Color temperature: | **Cold white 6000K** |
| Luminous flux: | **160lm** |
| Type: | **Hand torch** |
| Battery: | **2xAAA** |
| Working time: | **up to 1,5h** |
| Power: | **2W** |
| Life span: | **50 000h** |

2xAAA*

IPX4

Ø15mm x 149mm

LUMENS 160 lm

working time up to 1,5h

30,6g

* Duracell batteries are included with the flashlight.

# BLAUPUNKT

BLAUPUNKT Brand established 1924 GERMANY

# MULTIFUNCTIONAL LED DESK LAMP

## QI WIRELESS CHARGING

***Set the right mood with single touch.***

Eye Protection

2 YEAR GUARANTEE

| | |
|---|---|
| EAN: | **5907622676789 / 5907622676796** |
| SKU: | **BLAUPUNKT-LBB6PRO / LBW6PRO** |
| Color Temperature: | **3000K Warm - 4500K Natural - 6000K Cool** |
| Luminous Flux: | **420 Lumens** |
| Type: | **Colour Change + Dimming** |
| Charging: | **QI Wireless Charging 10W + 1xUSB 5V/1A** |
| Lighting Power: | **6W** |
| CRI/RA: | **80+** |
| Material: | **ABS + PS** |
| Beam Angle: | **120°** |
| Warranty: | **2 Years** |
| Life Span: | **50 000h** |

**Adjustable Color and Brightness** - Work safely, eye caring desk lamp features 3 colour temperatures and 5 level of brightness.

**QI Wireless Charging** - Charge phone conveniently. Quick induction charges battery to full in 2 hours.

**Fully Adjustable Arm** - Set position as desired. Compact design with elegant leather look.

**Backlit Display** - Elegant display features clock, thermometer, date and alarm. Light blue backlight can be turned on or off.

***Enjoy it.***

# BLAUPUNKT

BLAUPUNKT Brand established 1924 GERMANY

# Desk Lamp 6W CCT

**Dimmable** stepless dimming

**Color Switch** warm, natural, cold white

**High Quality Artificial Leather**

**Full beam angle adjustment**

**Phone** holder

**German** quality

***Enjoy it.***

| | | |
|---|---|---|
| EAN: | **5907622672873** | **5907622672767** |
| SKU: | **BLAUPUNKT-LBW6CCT** | **BLAUPUNKT-LBB6CCT** |
| Color temperature: | **Adjustable 3000K/4000K/6000K** | **Adjustable 3000K/4000K/6000K** |
| Luminous flux: | **>350lm** | **>350lm** |
| USB port output: | **1 Port DC 5V/1A** | **1 Port DC 5V/1A** |
| Power: | **6W** | **6W** |
| CRI/Ra: | **>80** | **>80** |
| Led type: | **2835 SMD** | **2835 SMD** |
| Beam angle: | **120°** | **120°** |
| Guarantee: | **2 year** | **2 year** |
| Life span: | **50 000h** | **50 000h** |

**Full set Plug&Play**

BLAUPUNKT

BLAUPUNKT Brand established 1924 GERMANY

# Magnetic Cordless LED Lamp

## with motion sensor, usb rechargeable

**3 Switch**
Mode

**USB**
Rechargeable

**4000K**

**Motion sensor**
PiR

**Magnetic**

**Rechargeable**
USB

**Water Resistant**
IP20

**Long Life**
Battery

**Luminous**
100lm

Built - in
Motion Detector

Without Drilling

No electrical
connection

**1** Peel off the sticker from the magnets.

**2** Glue the magnets to the wall .

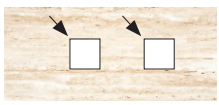

**3** Attach the lamp to the magnet.

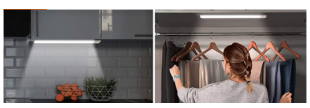

**4** Take off the lamp and connect it for charging.

| | |
|---|---|
| EAN: | **5907622673979** |
| SKU: | **BLAUPUNKT-CL2NW** |
| Colour temperature: | **Neutral White 4000K** |
| Luminous flux: | **100lm** |
| PiR Distance: | **3m** |
| 3 Switch Mode: | **ON/OFF/Auto** |
| Dimensions: | **240 mm x 39 mm x 10 mm** |
| Weight: | **185g** |

BLAUPUNKT

BLAUPUNKT Brand established 1924 GERMANY

# Downlight recessed 7W

3 YEAR GUARANTEE

**Adjustable**

**80% more** savings

**Colour rendering index** CRI>80

**Color temperature** warm white

***Enjoy it.***

| | |
|---|---|
| EAN: | **5907622672880** |
| SKU: | **BLAUPUNKT-DLR7WW** |
| Color temperature: | **Warm white 3000K** |
| Luminous flux: | **595lm** |
| Water resistance: | **IP20** |
| Power: | **7W** |
| CRI/Ra: | **>80** |
| Efficiency: | **85lm/W** |
| Beam angle: | **36°** |
| Guarantee: | **3 year** |
| Life span: | **50 000h** |

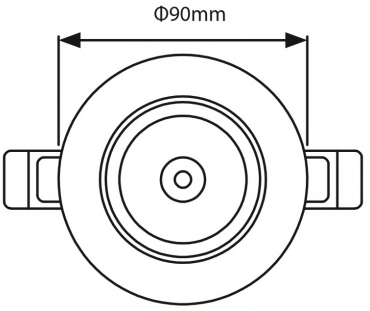

Cut hole
Ø75mm

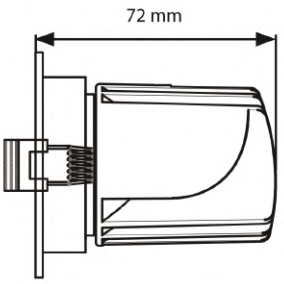

BLAUPUNKT

BLAUPUNKT Brand established 1924 GERMANY

# LED Spot Roller 10W

## Surface

YEAR GUARANTEE

**Efficiency:** 100lm/W

**Easy** assemble

**Power Factor** >0,9

**Flicker** free

**Color temperature:** warm, natural white

***Enjoy it.***

| EAN: | 5907622673009 | 5907622673023 | 5907622673016 | 5907622673030 |
|---|---|---|---|---|
| SKU: | BLAUPUNKT-DLW10WW | BLAUPUNKT-DLB10WW | BLAUPUNKT-DLW10NW | BLAUPUNKT-DLB10NW |
| Housing | white | black | white | black |
| Color temperature: | warm white 3000K | warm white 3000K | natural white 4000K | natural white 4000K |
| Luminous flux: | 1000lm | 1000lm | 1000lm | 1000lm |
| Power: | 10W | 10W | 10W | 10W |
| CRI: | >80 | >80 | >80 | >80 |
| Power Factor: | >0,9 | >0,9 | >0,9 | >0,9 |
| Beam angle: | 60° | 60° | 60° | 60° |
| Life span: | 50 000h | 50 000h | 50 000h | 50 000h |
| Guarantee: | 3 year | 3 year | 3 year | 3 year |

BLAUPUNKT

BLAUPUNKT Brand established 1924 GERMANY

# Plafond Led 18W 6in1 IP44

## with light color switch

3000k 4000k 6000k

The box will contain all necessary mounting accessories, both surface and recessed mounted

**Plafond 6in1**
3 light colors
2 ways of mounting

**Color switch**
warm, neutral, cool white

**Mounting**
surface
recessed

LUMENS

**Efficiency**
110 lm/W

***Enjoy it.***

| | |
|---|---|
| EAN: | **5907622671531** |
| SKU: | **BLAUPUNKT-PLA-18W-CCT** |
| Color temperature: | **3000/4000/6000K warm/neutral/cool** |
| Luminous flux: | **2000lm** |
| Mounting method: | **Surface/Recessed** |
| Power: | **18W** |
| Power Factor: | **>0,95** |
| Efficiency: | **110lm/W** |
| Beam angle: | **120°** |
| Guarantee: | **3 year** |
| Life span: | **50 000h** |

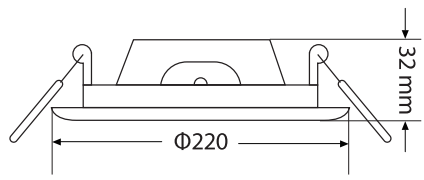

Mounting hole
Ø200-210mm

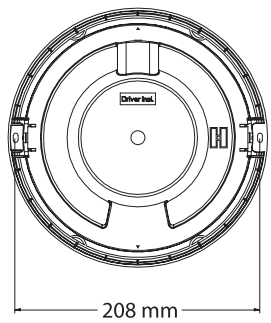

BLAUPUNKT

BLAUPUNKT Brand established 1924 GERMANY

# Plafond Led Eiger 24W

3 YEAR GUARANTEE

**Lumens**
2200lm

**Power Factor**
>0,9

**Flicker**
free

**Life span**
leds

***Enjoy it.***

| | |
|---|---|
| EAN: | **5907622672903** |
| SKU: | **BLAUPUNKT-PL24NW** |
| Color temperature: | **Neutral white 4000K** |
| Luminous flux: | **2200lm** |
| Water resistance: | **IP20** |
| Power: | **24W** |
| CRI/Ra: | **>80** |
| Efficiency: | **90lm/W** |
| Beam angle: | **120°** |
| Guarantee: | **3 year** |
| Life span: | **50 000h** |

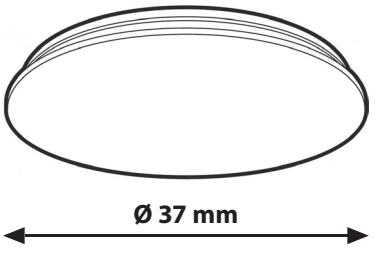

BLAUPUNKT

BLAUPUNKT Brand established 1924 GERMANY

# Plafond Led 18W IP54

3 YEAR GUARANTEE

**Efficiency**
100lm/W

**Water resistance**
IP54

**Life span**
LEDs

**Color temperature**
neutral white

***Enjoy it.***

| | |
|---|---|
| EAN: | **5907622672729** |
| SKU: | **BLAUPUNKT-PL 18WNW** |
| Color temperature: | **Neutral white 4000K** |
| Luminous flux: | **1800lm** |
| Water resistance: | **IP54** |
| Power: | **18W** |
| CRI/Ra: | **>85** |
| Efficiency: | **100lm/W** |
| Beam angle: | **120°** |
| Guarantee: | **3 year** |
| Life span: | **50 000h** |

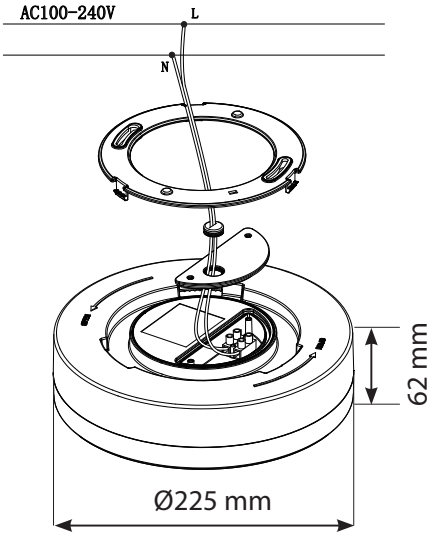

BLAUPUNKT

BLAUPUNKT Brand established 1924 GERMANY

# Plafon Led 18W IP54

## with microwave motion sensor

**Microwave motion sensor**
reach 5-8 m

**Efficiency**
100lm/W

**Water resistance**
IP54

**Life span**
LEDs

***Enjoy it.***

| | |
|---|---|
| EAN: | **5907622672712** |
| SKU: | **BLAUPUNKT-PL 18NW-M** |
| Color temperature: | **Neutral white 4000K** |
| Luminous flux: | **1800lm** |
| Water resistance: | **IP54** |
| Power: | **18W** |
| CRI/Ra: | **>85** |
| Efficiency: | **100lm/W** |
| Beam angle: | **120°** |
| Guarantee: | **3 year** |
| Life span: | **50 000h** |

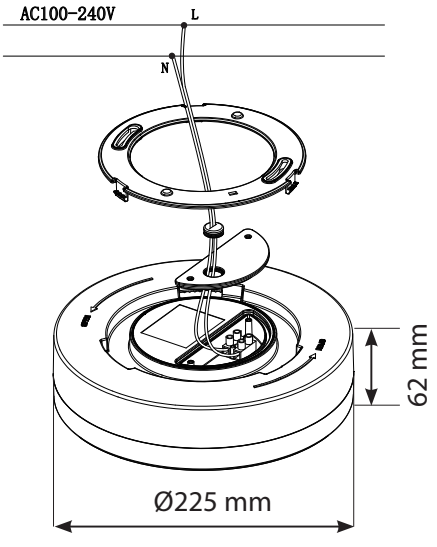

# BLAUPUNKT

BLAUPUNKT Brand established 1924 GERMANY

## Strongbeam Led 50W IP65

**Glare free** cover

**Water resistance** IP65

4000K

**Color temperature** neutral white

**80% higher** savings

***Enjoy it.***

| | |
|---|---|
| EAN: | **5907622672538** |
| SKU: | **BLAUPUNKT-NLS50NW** |
| Color temperature: | **Neutral white 4000K** |
| Luminous flux: | **4000lm** |
| Type: | **Floodlight** |
| Power: | **50W** |
| CRI/Ra: | **>80** |
| Efficiency: | **80lm/W** |
| Beam angle: | **120°** |
| Guarantee: | **2 year** |
| Life span: | **50 000h** |

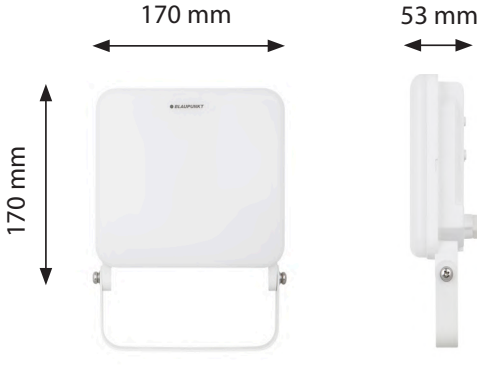


RoHS

# BLAUPUNKT

BLAUPUNKT Brand established 1924 GERMANY

# Stronbeam Led 30W IP65

## with PIR motion and twilight sensor

**Motion sensor**
range 8-10m

**Advanced control**
pilot

**Water resistance**
IP65

**Color temperature**
neutral white

***Enjoy it.***

Advanced controls:
sensitivity, time and sensor twilight threshold.

| | |
|---|---|
| EAN: | **5907622672521** |
| SKU: | **BLAUPUNKT-NLS30NW** |
| Color temperature: | **Neutral white 4000K** |
| Luminous flux: | **2400lm** |
| Type: | **Floodlight** |
| Power: | **30W** |
| CRI/Ra: | **>80** |
| Efficiency: | **80lm/W** |
| Beam angle: | **120°** |
| Guarantee: | **2 year** |
| Life span: | **50 000h** |

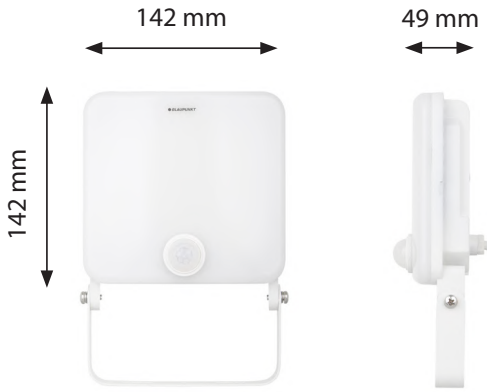


RoHS

# BLAUPUNKT

BLAUPUNKT Brand established 1924 GERMANY

# Strongbeam Led 20W IP65

**Glare free** cover

**Water resistance** IP65

4000K

**Color temperature** neutral white

**80% higher** savings

***Enjoy it.***

| | |
|---|---|
| EAN: | **5907622672514** |
| SKU: | **BLAUPUNKT-NLS20NW** |
| Color temperature: | **Neutral white 4000K** |
| Luminous flux: | **1600lm** |
| Type: | **Floodlight** |
| Power: | **20W** |
| CRI/Ra: | **>80** |
| Efficiency: | **80lm/W** |
| Beam angle: | **120°** |
| Guarantee: | **2 year** |
| Life span: | **50 000h** |

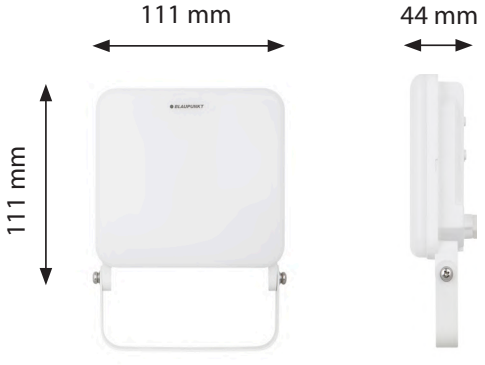


RoHS

BLAUPUNKT

BLAUPUNKT Brand established 1924 GERMANY

# Panel Led Quantum 40W

3 YEAR GUARANTEE

**Power / Lumens**
40 W / 4400lm

**Flicker**
free

**Life span**
leds

**Alluminium**
body

**Color temperature:**
neutral white

***Enjoy it.***

| | |
|---|---|
| EAN: | **5907622671647** |
| SKU: | **BLAUPUNKT-PLS 40NW** |
| Color temperature: | **Neutral white 4000K** |
| Luminous flux: | **4400lm** |
| Power Factor: | **>0,95** |
| Power: | **40W** |
| CRI/Ra: | **>80** |
| Efficiency: | **110lm/W** |
| Beam angle: | **120°** |
| Guarantee: | **3 year** |
| Life span: | **50 000h** |

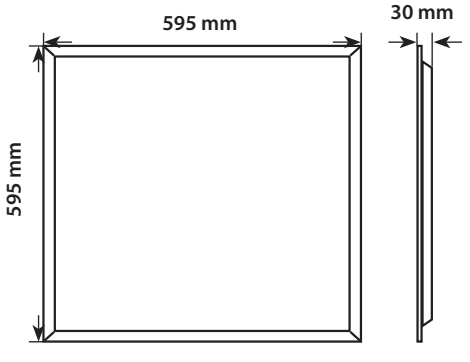

BLAUPUNKT

BLAUPUNKT Brand established 1924 GERMANY

# Panel Led Quantum 40W

Recessed:

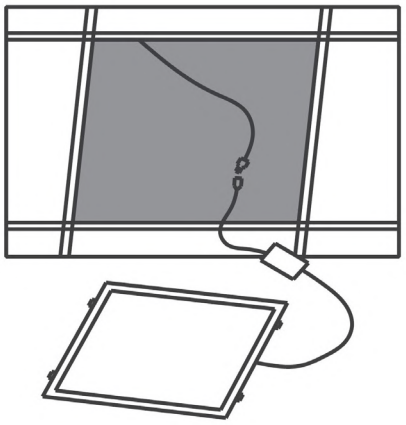

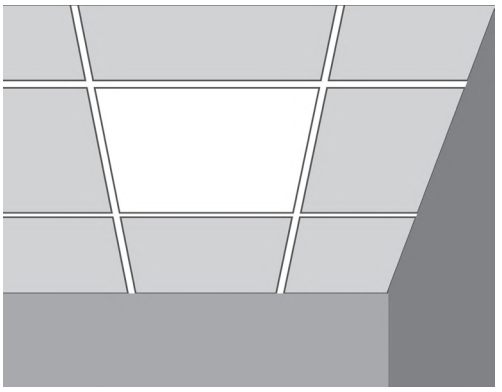

Blaupunkt Panel LED Quantum 40W

5 907622 671647 >

Suspended:

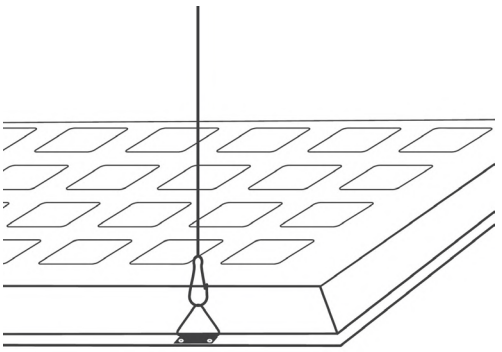

BLAUPUNKT PANEL LED QUANTUM 40W WITH CLIPS

5 907622 672859 >

Surface:

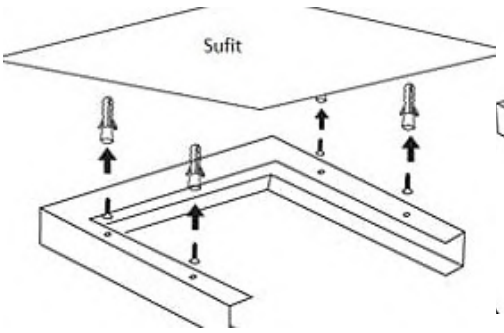


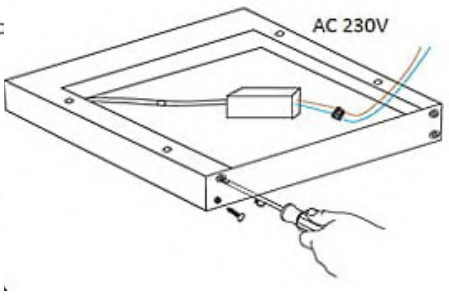


Blaupunkt Panel LED Quantum 40W NARROW INPUT

5 907622 672569 >

*Mounting accessories must be purchased separately.

**Enjoy it.**

BLAUPUNKT

BLAUPUNKT Brand established 1924 GERMANY

# Track Light Vision 30W

## 3-phase with color switch

3 YEAR GUARANTEE

**Color switch**
warm, natural, cold white

**Colour rendering index**
CRI>90

**Dimmable**
Triac

**Flicker**
free

**Lumens**
2700lm

***Enjoy it.***

| | | |
|---|---|---|
| EAN: | **5907622672576** | **5907622671654** |
| SKU: | **BLAUPUNKT-RS3W-30CCT** | **BLAUPUNKT-RS3-30CCT** |
| Housing: | **White** | **Black** |
| Luminous flux: | **2700lm** | **2700lm** |
| Color temperature: | **Adjustable 3000/4000/5700K** | **Adjustable 3000/4000/5700K** |
| Power: | **30W** | **30W** |
| CRI: | **>90** | **>90** |
| Power Factor: | **>0,9** | **>0,9** |
| Beam angle: | **36°** | **36°** |
| Life span: | **50 000h** | **50 000h** |
| Guarantee: | **3 year** | **3 year** |

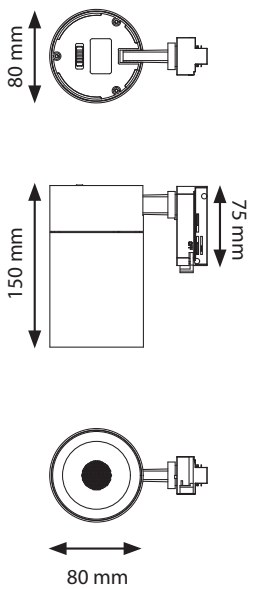

BLAUPUNKT

BLAUPUNKT Brand established 1924 GERMANY

# Track Light Vision 30W

## 1-phase with color switch

3 YEAR GUARANTEE

**Color switch**
warm, natural, cold white

**Colour rendering index**
CRI>90

**Dimmable**
Triac

**Flicker**
free

**Lumens**
2700lm

***Enjoy it.***

| | | |
|---|---|---|
| EAN: | **5907622672989** | **5907622672996** |
| SKU: | **BLAUPUNKT-RS1W-30CCT** | **BLAUPUNKT-RS1-30CCT** |
| Housing: | **White** | **Black** |
| Luminous flux: | **2700lm** | **2700lm** |
| Color temperature: | **Adjustable 3000/4000/5700K** | **Adjustable 3000/4000/5700K** |
| Power: | **30W** | **30W** |
| CRI: | **>90** | **>90** |
| Power Factor: | **>0,9** | **>0,9** |
| Beam angle: | **36°** | **36°** |
| Life span: | **50 000h** | **50 000h** |
| Guarantee: | **3 year** | **3 year** |

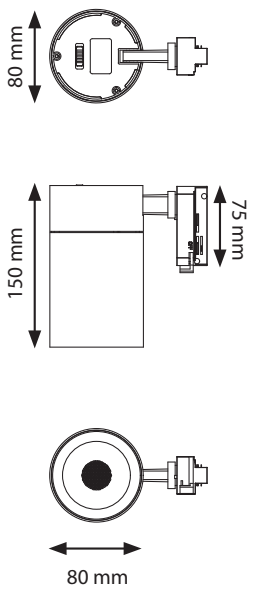

BLAUPUNKT

BLAUPUNKT Brand established 1924 GERMANY

# Track Storm 1-Phase 1 Meter

**1 Phase**
2 wire

**Colour**
black matt
white matt

**Power connection**
included

**End cap**
included

**Professional thick copper wires**

***Enjoy it.***

| | | |
|---|---|---|
| EAN: | **5907622672941** | **5907622672934** |
| SKU: | **Blaupunkt-S1W1** | **Blaupunkt-S1B1** |
| Colour: | **Matt white** | **Matt black** |
| Type: | **1-phase** | **1-phase** |
| Dimensions: | **1000x33,5x20,8mm** | **1000x33,5x20,8mm** |
| Material: | **Aluminium** | **Aluminium** |
| Guarantee: | **3 year** | **3 year** |

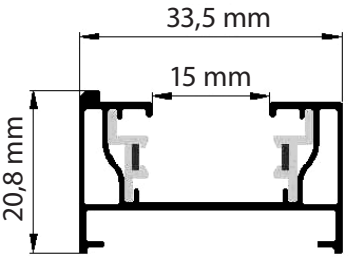

BLAUPUNKT

BLAUPUNKT Brand established 1924 GERMANY

# Prime 50W 130lm/W

3 YEAR GUARANTEE

**Efficiency**
130lm/W

**Water resistance**
IP65

**Life span**
LEDs

**Color temperature**
neutral white

***Enjoy it.***

| | |
|---|---|
| EAN: | **5907622672552** |
| SKU: | **BLAUPUNKT-NLP50NW** |
| Color temperature: | **Neutral white 4000K** |
| Luminous flux: | **6500lm** |
| Power Factor: | **>0,95** |
| Power: | **50W** |
| CRI/Ra: | **>80** |
| Efficiency: | **130lm/W** |
| Beam angle: | **60°** |
| Guarantee: | **3 year** |
| Life span: | **50 000h** |

BLAUPUNKT

BLAUPUNKT Brand established 1924 GERMANY

# Linear LED IP65

5 YEAR GUARANTEE

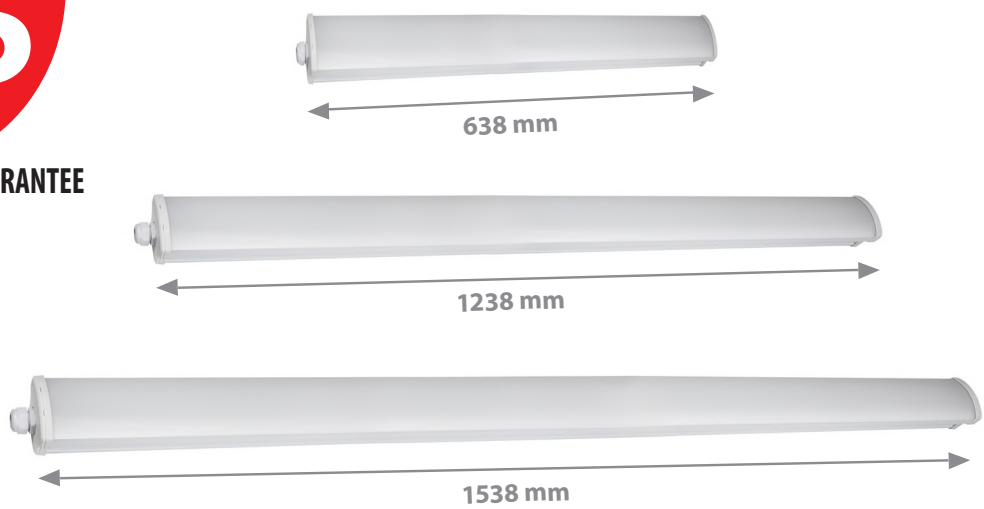


**Efficiency** 110lm/W

**Serial connection** fixtures

**Water resistance** IP65

**Mounting accessories** included

**Color temperature:** neutral white

**85% more** savings

| EAN: | 5907622671593 | 5907622671609 | 5907622671616 |
|---|---|---|---|
| SKU: | BLAUPUNKT-LH-18-NW | BLAUPUNKT-LH-36-NW | BLAUPUNKT-LH-50-NW |
| Power: | 18W | 36W | 50W |
| Luminous flux: | 1980lm | 3960lm | 5500lm |
| Color temperature: | Neutral white 4000K | Neutral white 4000K | Neutral white 4000K |
| Power Factor: | >0,95 | >0,95 | >0,95 |
| CRI/Ra: | >80 | >80 | >80 |
| Efficiency: | 110lm/W | 110lm/W | 110lm/W |
| Beam angle: | 120° | 120° | 120° |
| Guarantee: | 5 year | 5 year | 5 year |
| Life span: | 50 000h | 50 000h | 50 000h |

# Linear LED IP65

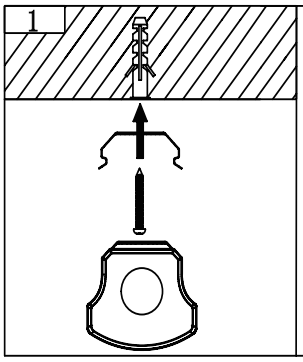


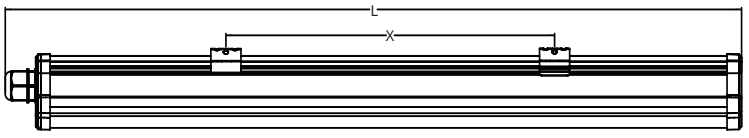


| Model | L | W | H1 | X | H2 |
|---|---|---|---|---|---|
| BLAUPUNKT-LH-18-NW | 612 mm | 68 mm | 56 mm | 300 ± 10 mm | 60 mm |
| BLAUPUNKT-LH-36-NW | 1212 mm | 68 mm | 56 mm | 900 ± 10 mm | 60 mm |
| BLAUPUNKT-LH-50-NW | 1512 mm | 68 mm | 56 mm | 1200 ± 10 mm | 60 mm |

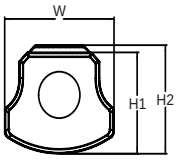


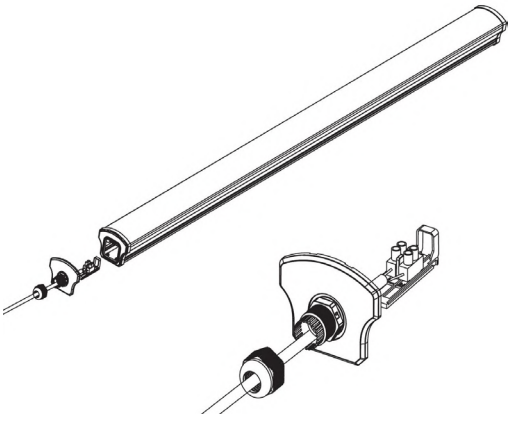

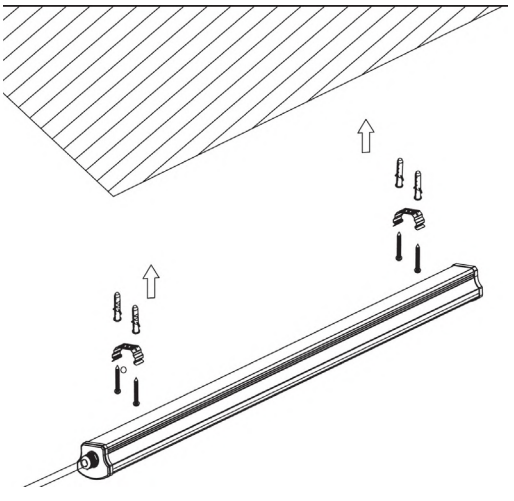

LUMINOUS INTENSITY DISTRIBUTION DIAGRAM

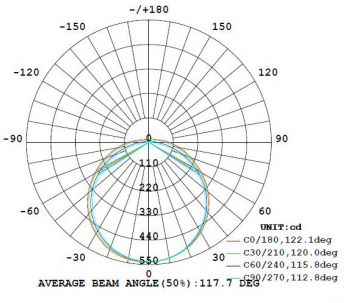


Blaupunkt Linear IP65 18W

5 907622 671593 >

LUMINOUS INTENSITY DISTRIBUTION DIAGRAM

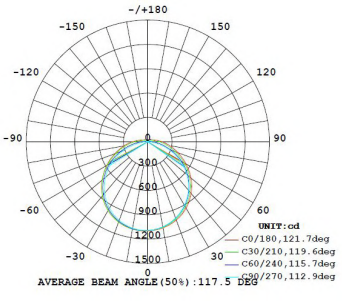


Blaupunkt Linear IP65 36W

5 907622 671609 >

LUMINOUS INTENSITY DISTRIBUTION DIAGRAM

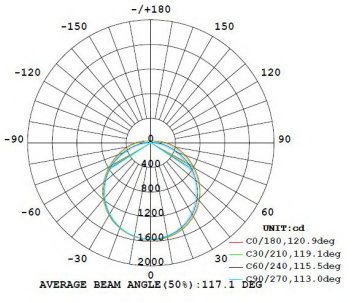


Blaupunkt Linear IP65 50W

5 907622 671616 >

**Enjoy it.**

# BLAUPUNKT

BLAUPUNKT Brand established 1924 GERMANY

## Highbay Led Jupiter IP65

5 YEAR GUARANTEE

**Efficiency**
155 lm/W

**Life span**
leds

**Water resistance**
IP65

**Power Factor**
>0,98

**Mechanical resistance**
IK08

**Color temperature:**
neutral white

| EAN: | 5907622672774 | 5907622672064 | 5907622672781 |
|---|---|---|---|
| SKU: | BLAUPUNKT-HBJ100NW | BLAUPUNKT-HBJ150NW | BLAUPUNKT-HBJ200NW |
| Power: | 100W | 150W | 200W |
| Luminous flux: | 15 500lm | 23 250lm | 31 000lm |
| Color temperature: | Neutral white 4000K | Neutral white 4000K | Neutral white 4000K |
| Mechanical resistance: | IK08 | IK08 | IK08 |
| Power Factor: | >0,98 | >0,98 | >0,98 |
| Efficiency: | 155lm/W | 155lm/W | 155lm/W |
| Beam angle: | 120° | 120° | 120° |
| Guarantee: | 5 year | 5 year | 5 year |
| Life span: | 50 000h | 50 000h | 50 000h |

BLAUPUNKT

BLAUPUNKT Brand established 1924 GERMANY

# Highbay Led Jupiter IP65

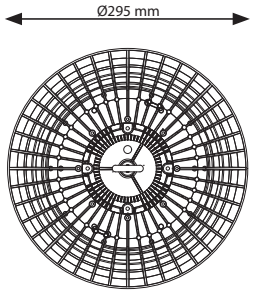


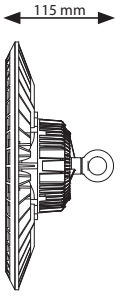


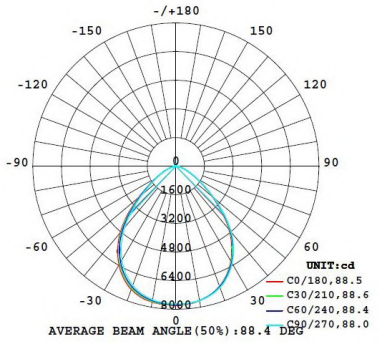


Blaupunkt Highbay Jupiter 100W

5 907622 672774 >

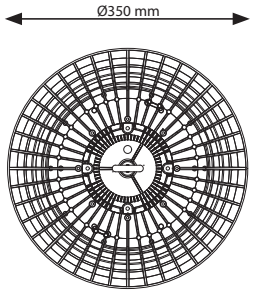


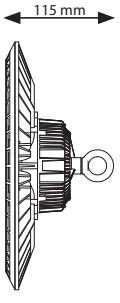


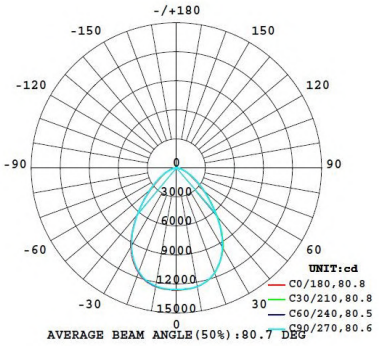


Blaupunkt Highbay Jupiter 150W

5 907622 672064 >

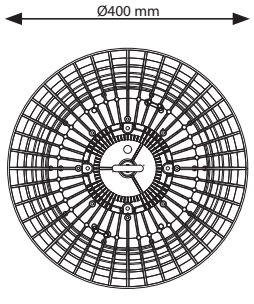


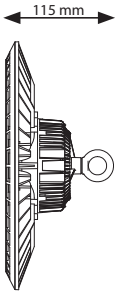


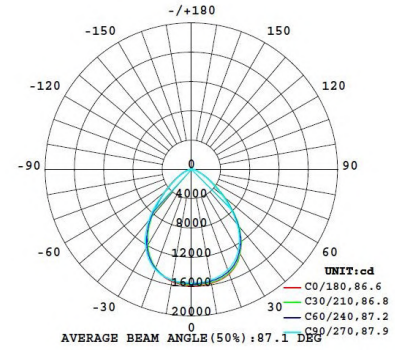


Blaupunkt Highbay Jupiter 200W

5 907622 672781 >

This product is also possible to order in other light colors
warm white (3000K) and cool white (6500K),
other lighting angles are also available 60°, 90°.

**Enjoy it.**

# BLAUPUNKT

BLAUPUNKT Brand established 1924 GERMANY

# Street Lamp Strasse 150lm/W

5 YEAR GUARANTEE

**Efficiency** 150 lm/W

**Tempered** glass

**Tool free** opening

**Power Factor** >0,9

**Beam angle** 155x80°

**Mechanical resistance** IK08

**Assembly for handles** horizontal vertical

**Lamp 2-chamber**

**Tilt adjustment** in the range of 0-90 °

| | | | | | |
|---|---|---|---|---|---|
| EAN: | 5907622673146 | 5907622673153 | 5907622673160 | 5907622673177 | 5907622673184 |
| SKU: | Blaupunkt-LU32NW | Blaupunkt-LU48NW | Blaupunkt-LU78NW | Blaupunkt-LU98NW | Blaupunkt-LU150NW |
| Power: | 32W | 48W | 78W | 98W | 150W |
| Luminous flux: | 4800lm | 7200lm | 11 700lm | 14 700lm | 22 500lm |
| Color temperature: | Natural white 4000K | Natural white 4000K | Natural white 4000K | Natural white 4000K | Natural white 4000K |
| Mechanical resistance: | IK08 | IK08 | IK08 | IK08 | IK08 |
| Power Factor: | >0,9 | >0,9 | >0,9 | >0,9 | >0,9 |
| Efficiency: | 150lm/W | 150lm/W | 150lm/W | 150lm/W | 150lm/W |
| Beam angle: | 155x80° | 155x80° | 155x80° | 155x80° | 155x80° |
| Guarantee: | 5 year | 5 year | 5 year | 5 year | 5 year |
| Life span: | 50 000h | 50 000h | 50 000h | 50 000h | 50 000h |

BLAUPUNKT

BLAUPUNKT Brand established 1924 GERMANY

# Street Lamp Strasse 150lm/W

**32W, 48W**

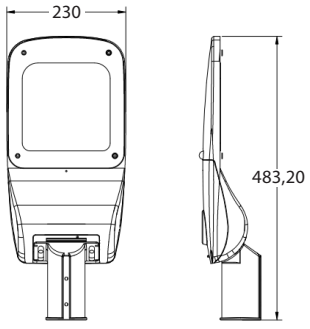


**78W, 98W**

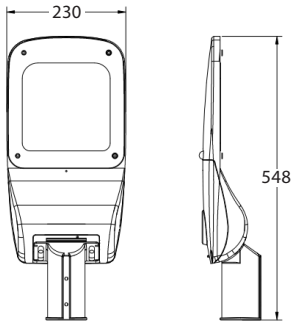


**150W**

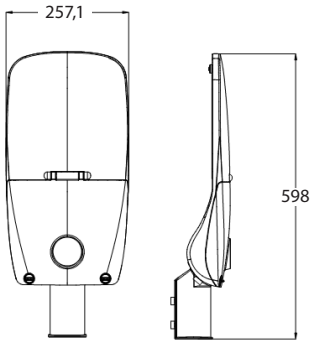

**All dimensions are given in mm.**

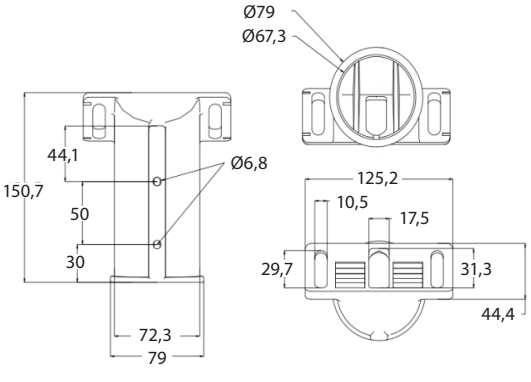


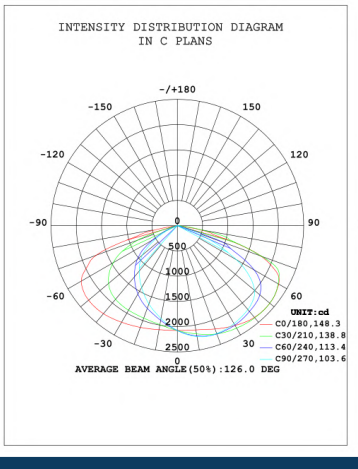


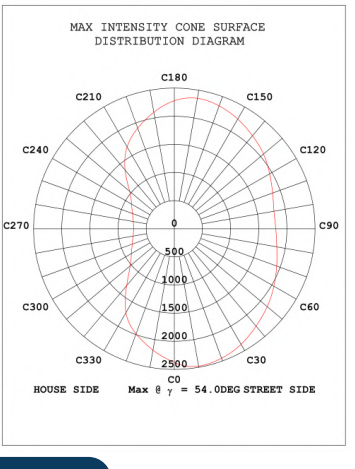


*Enjoy it.*

# BLAUPUNKT

BLAUPUNKT Brand established 1924 GERMANY

## Power Supply 12VDC

**Efficiency** >90%

**TÜV** certificate

**Power Factor** >0,9

| | | | | | |
|---|---|---|---|---|---|
| EAN: | 5907622673214 | 5907622672897 | 5907622673221 | 5907622673238 | 5907622673245 |
| SKU: | Blaupunkt-PS12 | Blaupunkt-PS20 | Blaupunkt-PS40 | Blaupunkt-PS60 | Blaupunkt-PS72 |
| Power: | 12W/1A | 20W/1.67A | 40W/3,33A | 60W/5A | 72W/6A |
| Dimensions: | 90x40x24mm | 120x42x20mm | 160x58x20mm | 185x64x22mm | 170x57x32mm |
| Output voltage: | 12V DC | 12V DC | 12V DC | 12V DC | 12V DC |
| Power Factor: | >0,9 | >0,9 | >0,9 | >0,9 | >0,9 |
| Efficiency: | >90% | >90% | >90% | >90% | >90% |
| Guarantee: | 3 year | 3 year | 3 year | 3 year | 3 year |
| Life Span: | 50 000h | 50 000h | 50 000h | 50 000h | 50 000h |

BLAUPUNKT

BLAUPUNKT Brand established 1924 GERMANY

# Power Supply 12VDC

| Model | W | OUTPUT DC | A | B | C | kg |
|---|---|---|---|---|---|---|
| Blaupunkt-PS12 | 12 | 12V | 90mm | 40mm | 24mm | 60g |
| Blaupunkt-PS20 | 20 | 12V | 120mm | 42 mm | 20mm | 80g |
| Blaupunkt-PS40 | 40 | 12V | 160mm | 58 mm | 20mm | 170g |
| Blaupunkt-PS60 | 60 | 12V | 185mm | 64 mm | 22mm | 230g |
| Blaupunkt-PS72 | 72 | 12V | 170mm | 57 mm | 32mm | 280g |

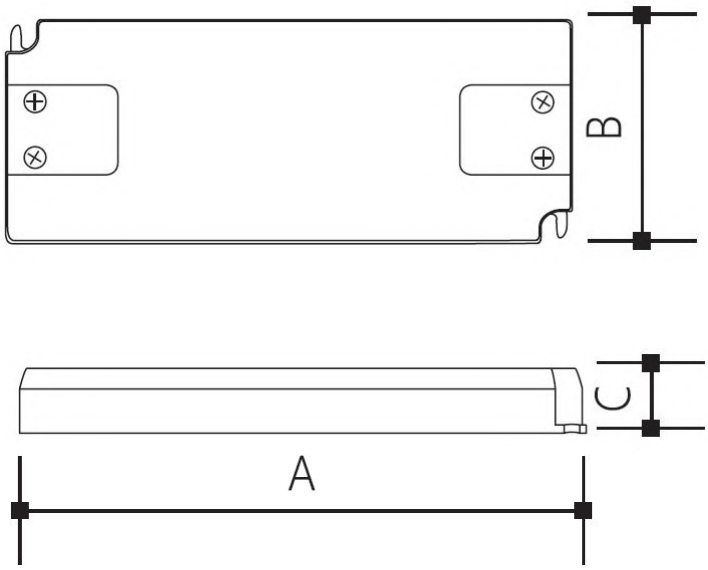


IP20 CE

Regular Production Surveillance Safety Type Approved
TÜVRheinland CERTIFIED
www.tuv.com ID 1419038062

*Enjoy it.*

BLAUPUNKT

*Enjoy it.*

Blaupunkt Competence Center Lightning Solutions,
Wołoska 16, 02-675 Warszawa
tel: +48 22-300-10-70
mail: biuro@greenie.pl

All rights reserved. All brand names
are registered trademarks of the company.
Data and technical parameters
subject to change without prior notice
prejudices.